Heat recovery at Soest University of Applied Sciences

Heat pumps deployed in properties

Builder: Bau- und Liegenschaftsbetrieb NRW, Soest

Planner: Bau- und Liegenschaftsbetrieb NRW, Soest

Initial situation: Canteen with connection to local heat within a university property

Commissioning: June 2011

Project task and project aims:

- Independent hot and warm water supply for the canteen outside the heating period
- Switching off the local heat line outside the heating period
- Recovering low-temperature waste heat from the ventilation and refrigeration system
- Reducing CO_2 emissions

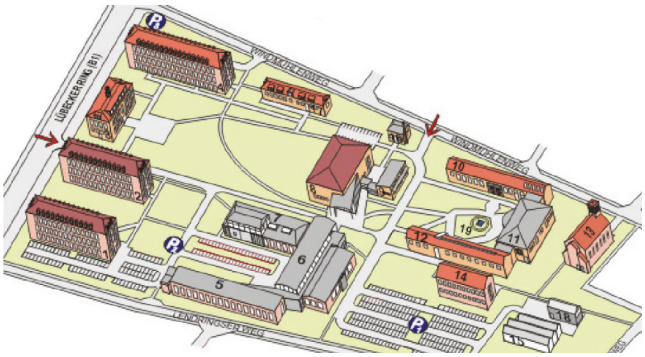

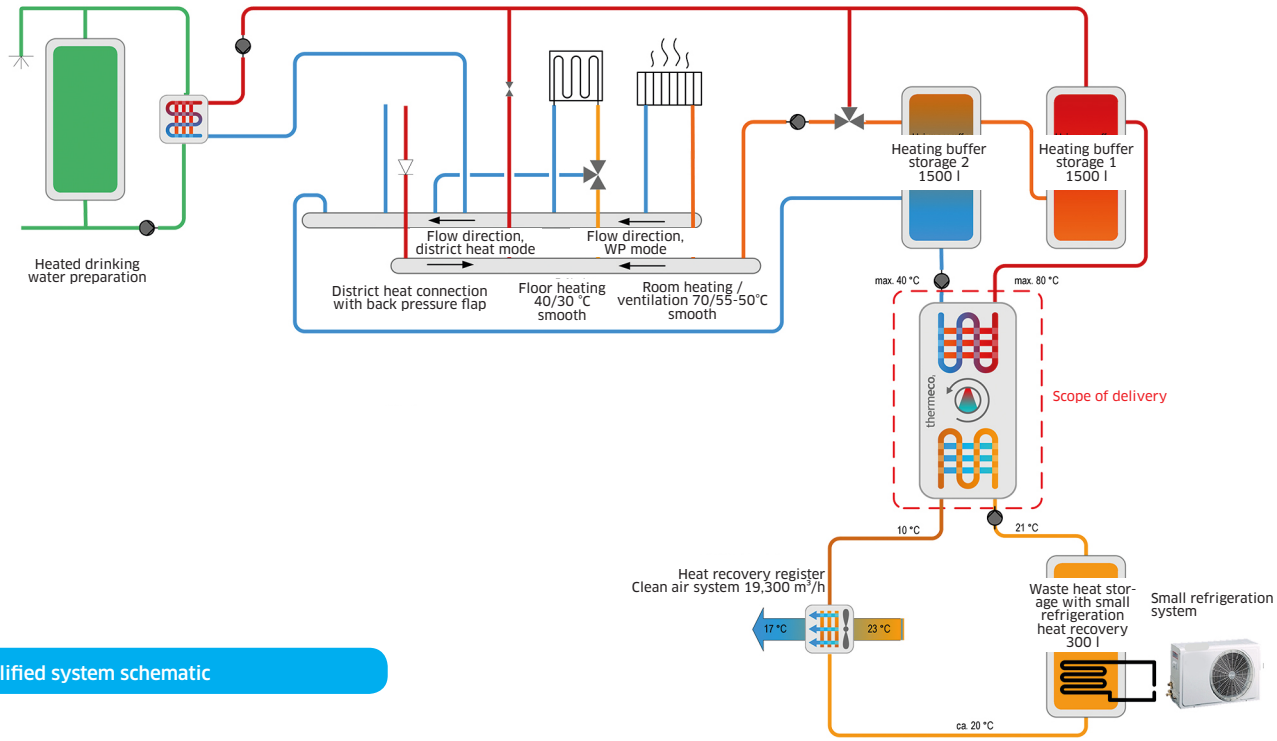

Simplified system schematic

Benefits of this system concept

This situation is unsuitable for traditional heat pumps because of the high supply temperatures of the existing heating system and because the temperatures of the heat sources fluctuate across a wide range.

The CO_2 high-temperature heat pump from ENGIE Refrigeration was chosen because it can supply the required network temperatures, retain a reserve for supply temperatures up to 90 °C, and can also be operated in parallel to a district heat supply. In addition, the high-quality, flexible control system of the heat pump ensures operational reliability in all conceivable operating situations.

The Soest BLB branch is pleased with the savings that can be achieved with the new heat pump and that make it interesting for other applications as well.

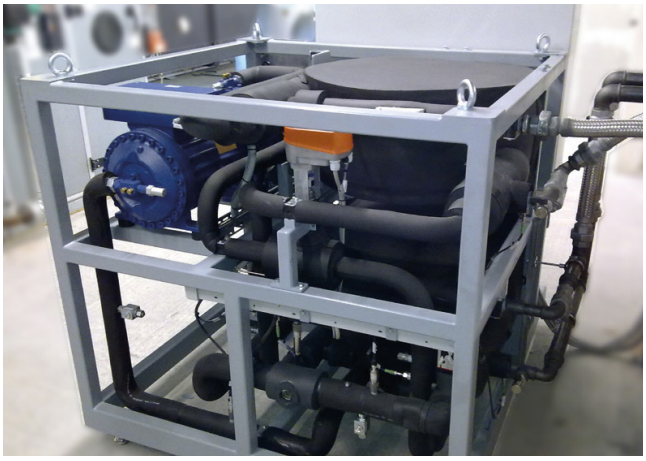

Technical data

- Machine type: 1 x thermeco$_2$ HHR 45 with FU
- Total heating capacity: 45 kW at 80 / 40 °C
- Total refrigeration capacity: 30 kW at 21 / 10 °C
- Electrical power consumption: 15 kW
- COP heat pump: 3.0
- Annual heating capacity: 152 MWh
- CO_2 emission reduction: 46% (29 t/a)
- Design: Water / water

ENGIE Refrigeration GmbH
Josephine-Hirner-Straße 1&3 | D-88131 Lindau, Germany
Phone: +49 8382 706-1 | Fax: +49 8382 706-410

refrigeration@de.engie.com
engie-refrigeration.de

Subject to changes. Version: 20180905